

A Upright Post

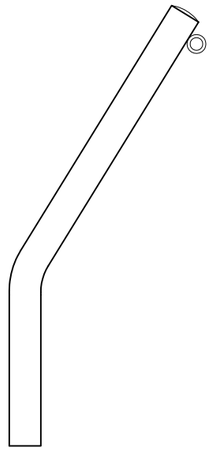

B Arch Unit w/ Eyebolt

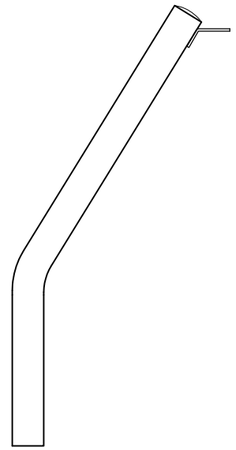

C Arch Unit w/ Anchor Bracket

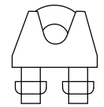

D Cable Clamp

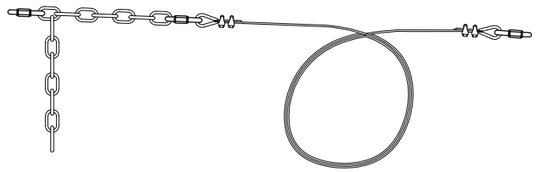

E Long Cable Assembly

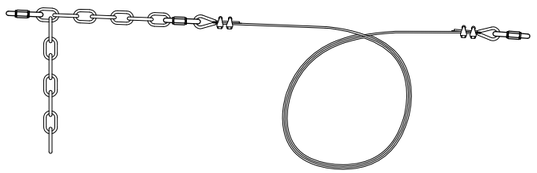

F Cross Cable Assembly

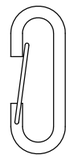

G Bit Snap

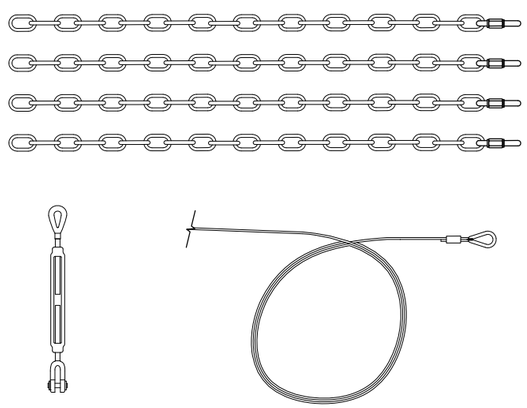

H Ground Cable Kit
NOT ALL ITEMS SHOWN

TUFFframe™ MODULAR BATTING CAGE SYSTEM

This is a standard Beacon Athletics product.
Any changes must be explicitly authorized and approved by Beacon Athletics.

PARTS LIST

SHEET ID	QTY	DESCRIPTION
A	8	Upright Post (*may be provided by customer*)
B	4	Arch Unit w/ Eyebolt
C	4	Arch Unit w/ Anchor Bracket
D	4	3/16" Cable Clamp
E	3	Long Cable Assembly - 3/16" galv. steel cable, tensioning chain, wide jaw quick links
F	4	Cross Cable Assembly - 3/16" galv. steel cable, tensioning chain, wide jaw quick links
G	120	Bit Snap 1/4"
H	1	Ground Cable Kit - (See Attached Dwg Pkg.)
-	1	Premium Cage Net 55' L x 14' W x 12' H
-	8	Ground Sleeves & Caps (Optional)

BEACON ATHLETICS
phone: 1-800-747-5985
www.BeaconAthletics.com

© Copyright 2014 Beacon Athletics,
Division of Rainbow Group, LLC.

DRAWING TITLE:
TUFFframe™ MODULAR OUTDOOR 55' BATTING CAGE - SINGLE
PARTS LIST AND IDENTIFICATION

CUSTOMER NAME: CUSTOMER NAME
PROJECT NAME: PROJECT NAME
PROJECT LOCATION: PROJECT LOCATION

REVISION #	DATE	BY
REV1	06/04/15	TMB

SCALE:	NTS
DRAWN BY:	JP
DATE:	01/17/2014
PROJECT NO:	
DRAWING NO:	**PS-1**

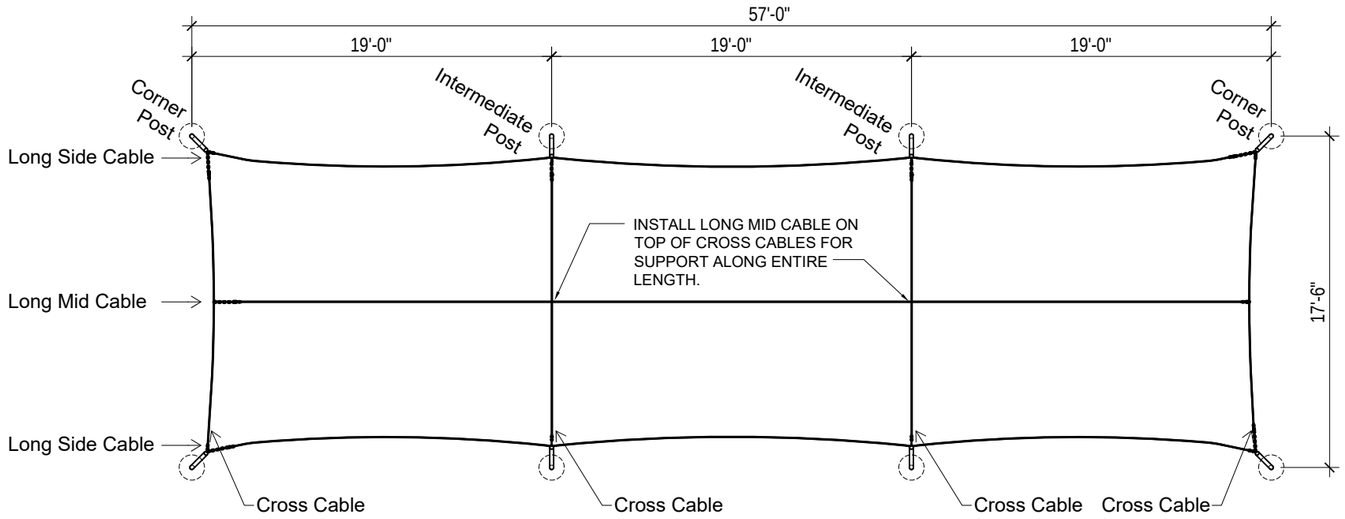

1 FOOTPRINT & CABLE LAYOUT

Scale:1/8"=1'-0"

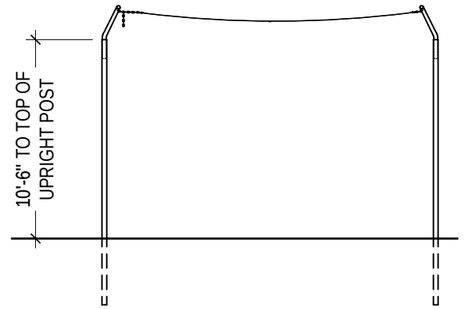

2 END ELEVATION

Scale:1/8"=1'-0"

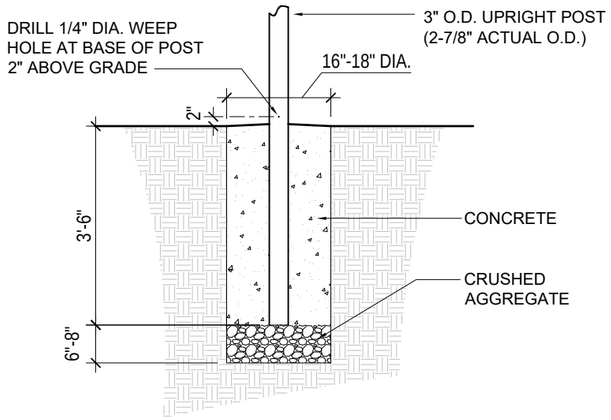

STANDARD DIRECT-BURY INSTALLATION

3 STANDARD FOOTING DETAIL

Scale:3/8"=1'-0"

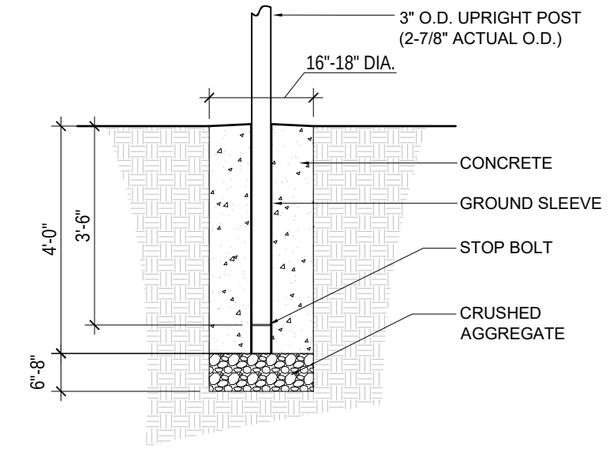

OPTIONAL GROUND SLEEVE INSTALLATION

4 OPTIONAL FOOTING DETAIL

Scale:3/8"=1'-0"

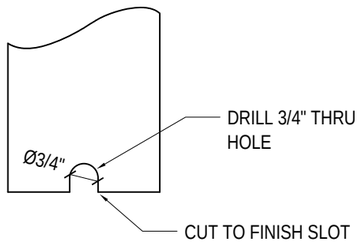

NOTCH POSTS W/ SOFT TOSS ATTACHMENT AND LOCK ONTO CROSS BOLT TO PREVENT POST ROTATION DURING SOFT TOSS CABLE TENSIONING

DIRECT-BURY INSTALLATION:

1. Locate and excavate footings as noted in Details 1 and 3 shown at left.
2. Fill bottom 6” - 8” of each footing with a coarse, compacted crushed aggregate.
3. Set one Upright Post directly onto aggregate in center of each footing and brace appropriately to hold in place. If the Upright Post has an internal burr on one end, place that end down into the footing. Height of Upright Post above grade should be 10'-6” as indicated on Detail 2.
4. Fill footings with 3,500 psi concrete mix and slope top surface away from each Upright Post to prevent water from pooling. Allow concrete to cure according to packaging instructions.
5. Once the concrete has cured, drill a 1/4” weep hole approximately 2” above grade on each Upright Post as indicated on Detail 3.

GROUND SLEEVE INSTALLATION (OPTIONAL):

1. Locate and excavate footings as noted in Details 1 and 4 shown at left.
2. Fill bottom 6” - 8” of each footing with a coarse, compacted crushed aggregate.
3. Set one Ground Sleeve directly onto aggregate in center of each footing (with the stop bolt at the bottom) and brace appropriately to hold in place.
4. Fill footings with 3,500 psi concrete mix and slope top surface away from each Ground Sleeve to prevent water from pooling. Allow concrete to cure according to packaging instructions.
5. Once the concrete has cured, insert one Upright Post into each Ground Sleeve until it comes to rest on the stop bolt. If the Upright Post has an internal burr on one end, place that end down into the sleeve. The height of the Upright Post above grade should be 10'-6” as indicated on Detail 2.

IMPORTANT: IF FREEZING TEMPERATURES OCCUR IN YOUR LOCATION, DO NOT BLOCK BOTTOM OPENING OF UPRIGHT POSTS OR GROUND SLEEVES WITH CONCRETE. DAMAGE MAY occur.

TUFFframe™ MODULAR BATTING CAGE SYSTEM

BEACON ATHLETICS
phone: 1-800-747-5985
www.BeaconAthletics.com

© Copyright 2014 Beacon Athletics, Division of Rainbow Group, LLC.

DRAWING TITLE: **TUFFframe™ MODULAR OUTDOOR 55' BATTING CAGE - SINGLE FOOTPRINT & FOOTING DETAIL**

CUSTOMER NAME:
PROJECT NAME:
PROJECT LOCATION:

REVISION #	DATE	BY
REV1	06/04/15	TMB

SCALE:	NTS
DRAWN BY:	JP
DATE:	01/17/2014
PROJECT NO:	
DRAWING NO:	**SD-2**

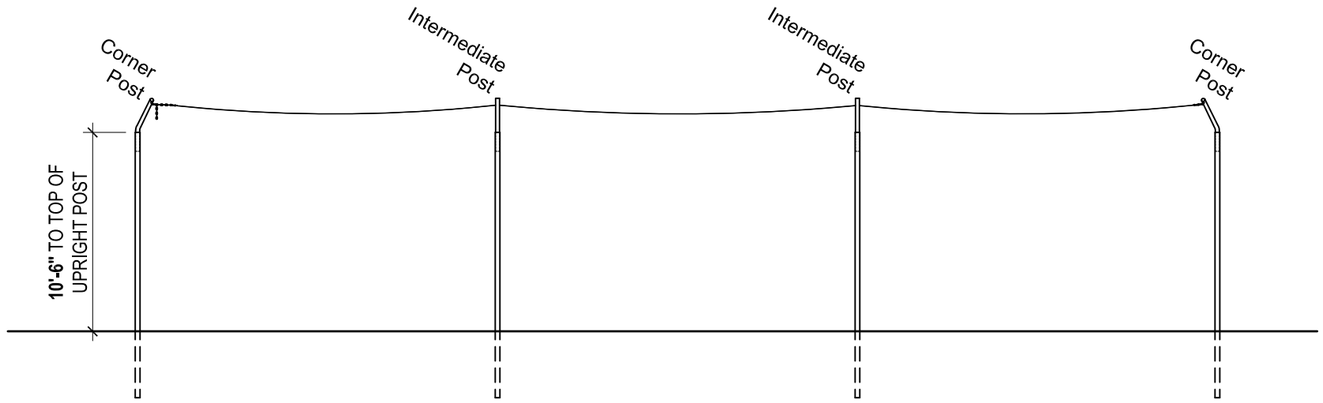

5 SIDE ELEVATION
Scale:1/8"=1'-0"

ARCH UNIT INSTALLATION:

1. After all Upright Posts are set in place, insert one Arch Unit w/Eyebolt into each corner post location, and one Arch Unit w/Anchor Bracket into each intermediate post location as noted in Detail 5 on this page.
2. Rotate each Arch Unit so the eyebolt or anchor bracket points towards the interior of the cage layout.

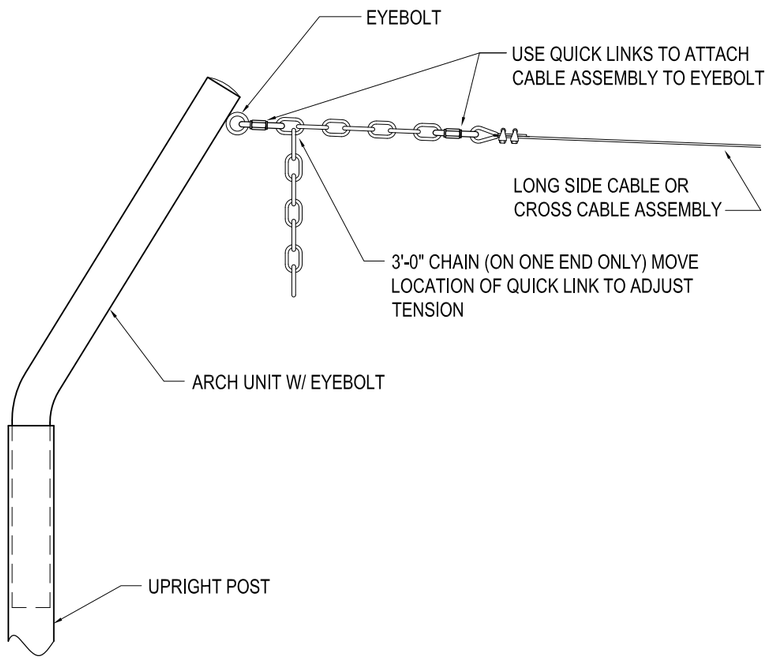

6 ATTACHMENT AT CORNER POST
Scale: NTS

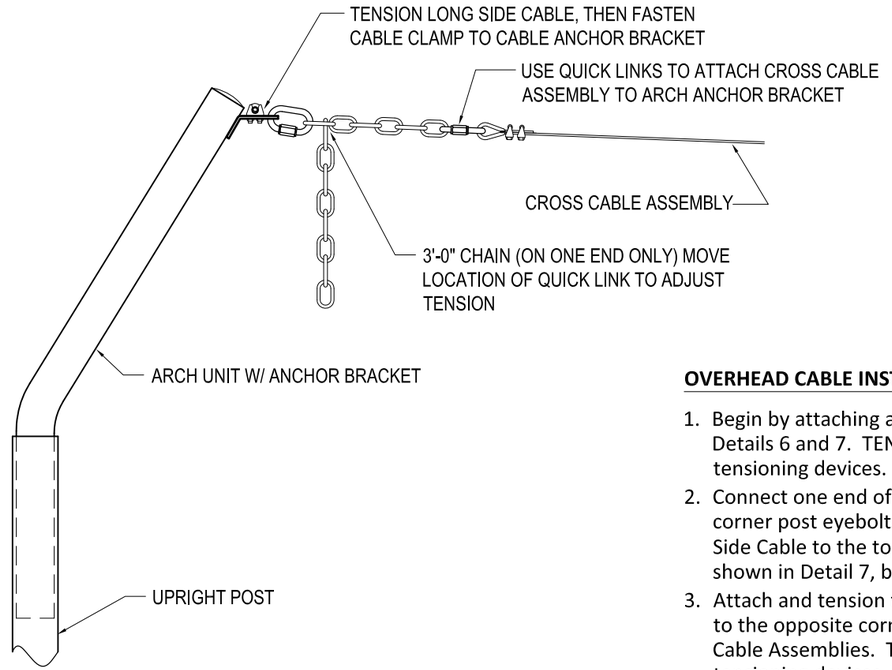

7 ATTACHMENT AT INTERMEDIATE POST
Scale: NTS

OVERHEAD CABLE INSTALLATION:

1. Begin by attaching and tensioning all Cross Cable Assemblies as shown in Details 6 and 7. TENSION ONLY BY HAND! Do not apply mechanical tensioning devices.
2. Connect one end of each Long Side Cable (end without chain) to the corner post eyebolts. At each intermediate post location, attach the Long Side Cable to the top of the Anchor Bracket using a 3/16" Cable Clamp as shown in Detail 7, but DO NOT TIGHTEN the Cable Clamps.
3. Attach and tension the other end of the Long Side Cable (end with chain) to the opposite corner post eyebolt in the same manner as the Cross Cable Assemblies. TENSION ONLY BY HAND! Do not apply mechanical tensioning devices.
4. Once all Long Side Cables are tensioned, tighten Cable Clamps at all intermediate post locations.
5. Connect Long Mid Cable at the center of one end Cross Cable. Lay the Long Mid Cable ON TOP OF the Cross Cables as noted on Detail 1 and connect to the other end Cross Cable. Apply light tension only.

TUFFframe™ MODULAR BATTING CAGE SYSTEM

BEACON ATHLETICS
phone: 1-800-747-5985
www.BeaconAthletics.com

© Copyright 2014 Beacon Athletics, Division of Rainbow Group, LLC.

DRAWING TITLE:
TUFFframe™ MODULAR OUTDOOR 55' BATTING CAGE - SINGLE
TOP CABLE ATTACHMENT

CUSTOMER NAME: CUSTOMER NAME
PROJECT NAME: PROJECT NAME
PROJECT LOCATION: PROJECT LOCATION

REVISION #	DATE	BY
REV1	06/04/15	TMB

SCALE:	NTS
DRAWN BY:	JP
DATE:	01/17/2014
PROJECT NO:	
DRAWING NO:	**SD-3**

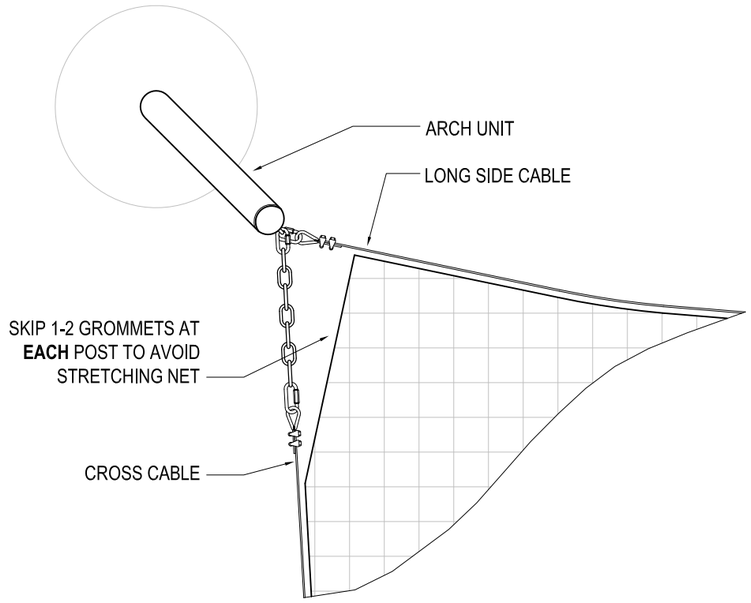

8 NET ATTACHMENT DETAIL
Scale: NTS

NET INSTALLATION:

1. Stretch the net out on the ground inside the cage to orient it correctly with the door flaps placed in the desired locations and top perimeter hem sitting on top.
2. Begin attaching the net at one end Cross Cable. Center the net on the Cross Cable from side-to-side so that the Long Mid Cable aligns with the center hem on the roof of the net. Connect the net to the end Cross Cable with Bit Snaps provided. Connect only through the grommets on the net - do not clip directly to the mesh of the net. The net will not reach all the way to the Arch Units - this is normal. Do not try to stretch the corners of the net all the way to the eyebolts - this may cause damage to the net.
3. Once the net is attached to the end Cross Cable, begin connecting along one Long Side Cable. You will have to skip the first one or two grommets along the side hem until it easily reaches the Long Side Cable (see Detail 8). This is normal. Again, do not try to stretch the net excessively to reach the cable.
4. This same process will need to be repeated at each intermediate post location as the net will not be able to stretch all the way to the eyebolts. The 2-4 grommets closest to the intermediate posts will need to be left free of the cable.
5. Continue connecting the net until you reach the end of the first Long Side Cable, leaving the last 3-4 feet free - this will be connected later as needed.
6. Repeat this process for the Long Mid Cable and second Long Side Cable. Please note that you will not have to skip any grommets for the Long Mid Cable - every grommet should be used.
7. Once the net is attached to all Long Cable Assemblies, the end can then be clipped to the remaining end Cross Cable. Again, the net should be centered side-to-side and will not reach all the way to the eyebolts.
8. After the end of the net is secured, go back to check the last 3-4 feet of each Long Side Cable that was left free. Connect any remaining grommets as able, remembering not to stretch the net excessively (some grommets may go unused).

TUFFframe™ MODULAR BATTING CAGE SYSTEM

BEACON ATHLETICS
phone: 1-800-747-5985
www.BeaconAthletics.com

© Copyright 2014 Beacon Athletics, Division of Rainbow Group, LLC.

DRAWING TITLE:
TUFFframe™ MODULAR OUTDOOR 55' BATTING CAGE - SINGLE NET AND GROUND CABLE ATTACHMENT

CUSTOMER NAME: CUSTOMER NAME
PROJECT NAME: PROJECT NAME
PROJECT LOCATION: PROJECT LOCATION

REVISION #	DATE	BY
REV1	06/04/15	TMB

SCALE: NTS
DRAWN BY: JP
DATE: 01/17/2014
PROJECT NO:
DRAWING NO: **SD-4**

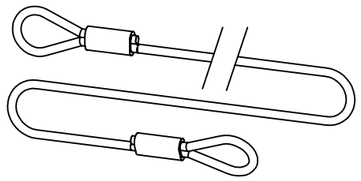

LENGTH CABLE 55'0" OR 70'0"
(BOTH ENDS FINISHED)

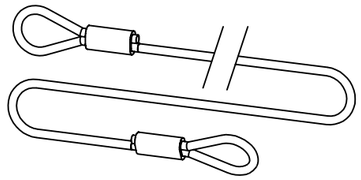

WIDTH CABLE 13'9"
(BOTH ENDS FINISHED)

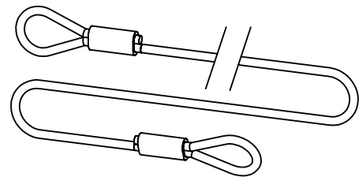

SHORT CABLE 3'0"
(BOTH ENDS FINISHED)

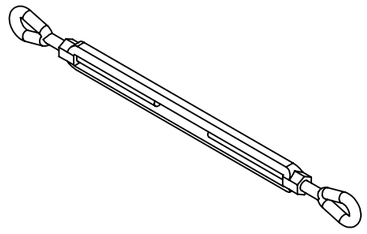

1/2" EYE-EYE TURNBUCKLE

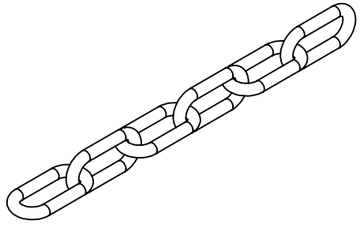

24" ADJUSTMENT CHAIN

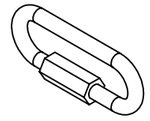

1/4" WIDE JAW QUICK LINK

QTY	DESCRIPTION
2	LENGTH GROUND CABLE (55'0" FOR 55' CAGE, 70'0" FOR 70' CAGE)
2	WIDTH GROUND CABLE 13'9"
2	1/2" EYE-EYE TURNBUCKLE
4	SHORT CABLE
2	24" ADJUSTMENT CHAIN
8	1/4" WIDE JAW ZINC PLATED QUICK LINKS
2	8" LONG 120# CABLE TIE PACKS

BEACON ATHLETICS
PHONE: 1-800-747-5985
www.BeaconAthletics.com

DRAWING TITLE:
BATTING CAGE GROUND CABLE KIT
PARTS LIST
CUSTOMER NAME:
PROJECT NAME:
PROJECT LOCATION:

REVISION #	BY	DATE
01	JD	04/04/2025

DRAWN BY: JD
DATE: 04/04/2025
SHEET NO:
GC-1

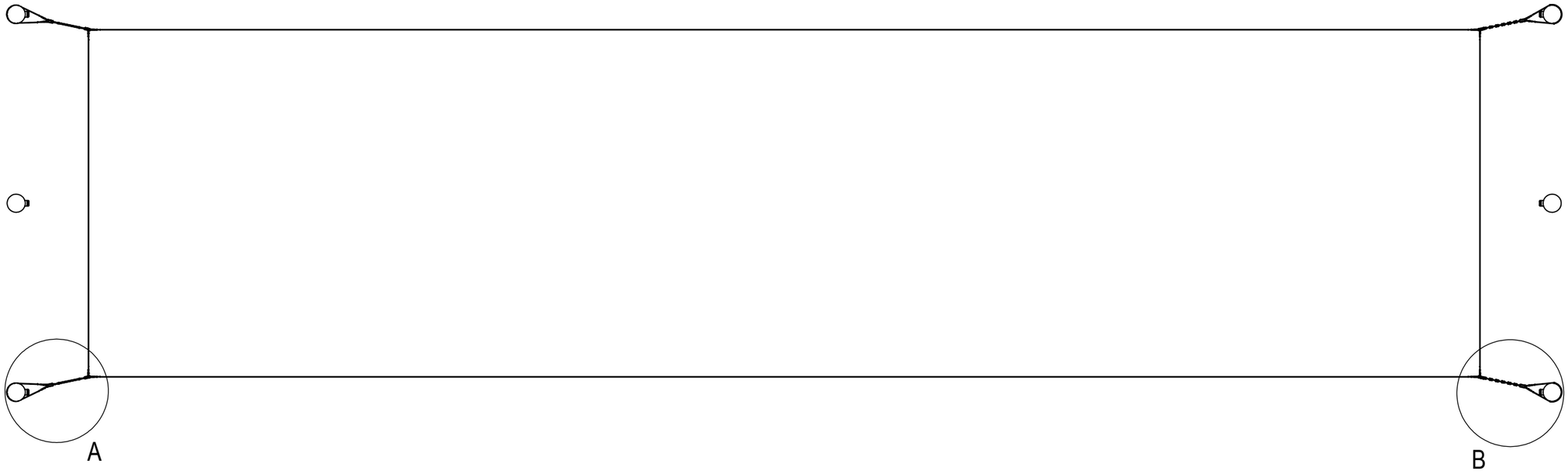

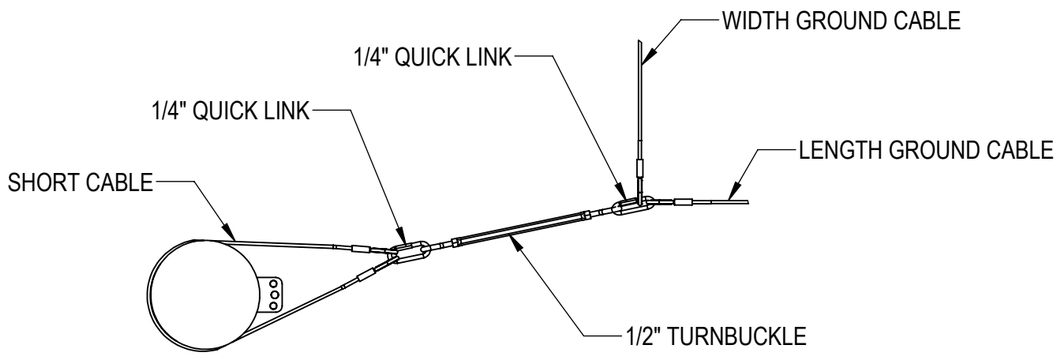

DETAIL A

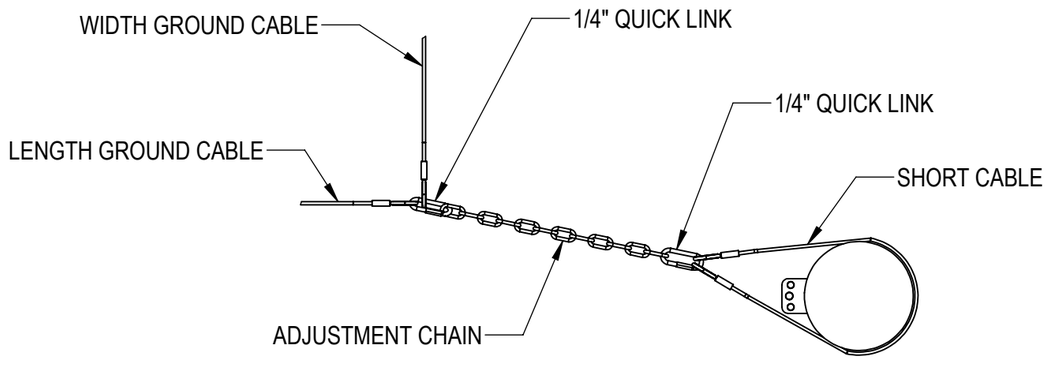

DETAIL B

BEACON ATHLETICS
PHONE: 1-800-747-5985
www.BeaconAthletics.com

DRAWING TITLE:
BATTING CAGE GROUND CABLE KIT LAYOUT
CUSTOMER NAME:
PROJECT NAME:
PROJECT LOCATION:

REVISION #	BY	DATE
01	JD	04/04/2025

DRAWN BY: JD
DATE: 04/04/2025
SHEET NO:
GC-2