

A Upright Post

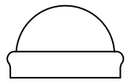

B Post Top Cap

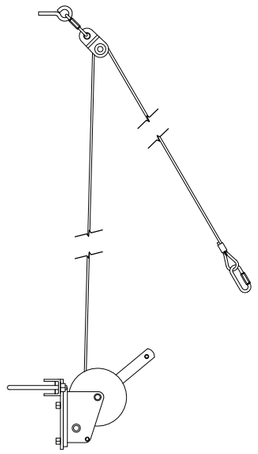

C Tension End Cable Assembly

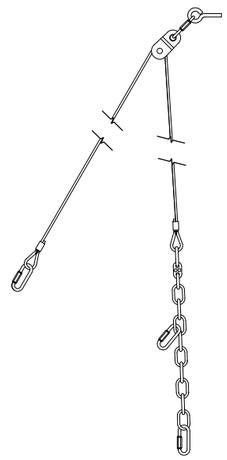

D Anchor End Cable Assembly

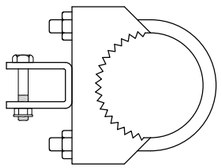

E Cable Anchor Bracket

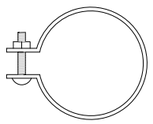

F Brace Band

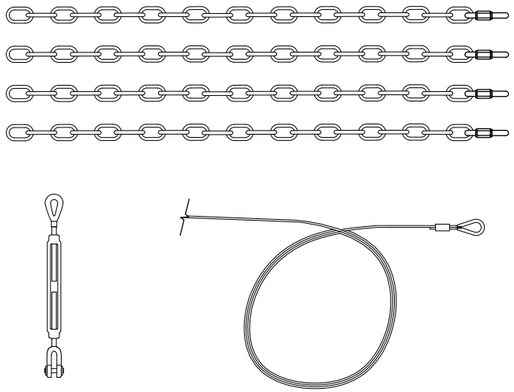

G Ground Cable Kit
NOT ALL ITEMS SHOWN

This is a standard Beacon Athletics product.
Any changes must be explicitly authorized and approved by Beacon Athletics.

PARTS LIST

SHEET ID	QTY	DESCRIPTION
A	6	Upright Post
B	6	Post Top Cap
C	3	Tension End Cable Assembly - winch, winch mount, fixed-eye pulley, steel cable, quick links
D	3	Anchor End Cable Assembly - chain, fuse link(s), fixed-eye pulley, steel cable, quick links
E	3	Cable Anchor Bracket with cross-bolt
F	3	Brace Band
G	1	Ground Cable Kit - (See Attached Dwg Pkg.)
-	1	Premium Cage Net 55' L x 14' W x 12' H or 70' L x 14' W x 12' H
-	6	Ground Sleeves & Caps (Optional)

BEACON ATHLETICS
phone: 1-800-747-5985
www.BeaconAthletics.com

© Copyright 2014 Beacon Athletics, Division of Rainbow Group, LLC.

DRAWING TITLE:
TUFFframe™ ELITE OUTDOOR 70' or 55' BATTING CAGE - SINGLE
PARTS LIST AND IDENTIFICATION

CUSTOMER NAME:
PROJECT NAME:
PROJECT LOCATION:

REVISION #	DATE	BY
REV1	06/14/15	TMB

SCALE:	SEE DWG
DRAWN BY:	JP
DATE:	06/20/2014
PROJECT NO:	
DRAWING NO:	**PS-1**

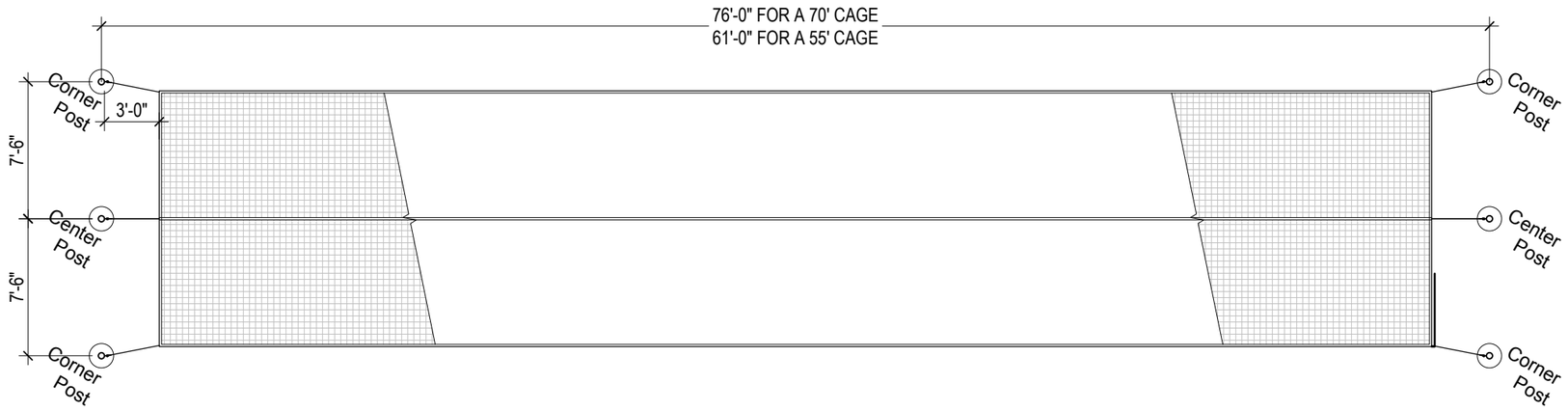

1 PLAN VIEW
Scale:1/8"=1'-0"

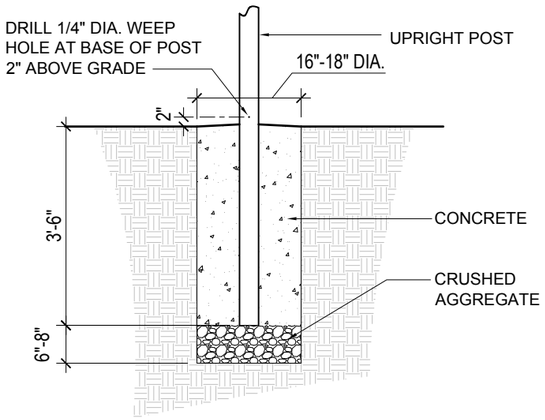

STANDARD DIRECT-BURY INSTALLATION

2 STANDARD FOOTING DETAIL
Scale: 3/8"=1'-0"

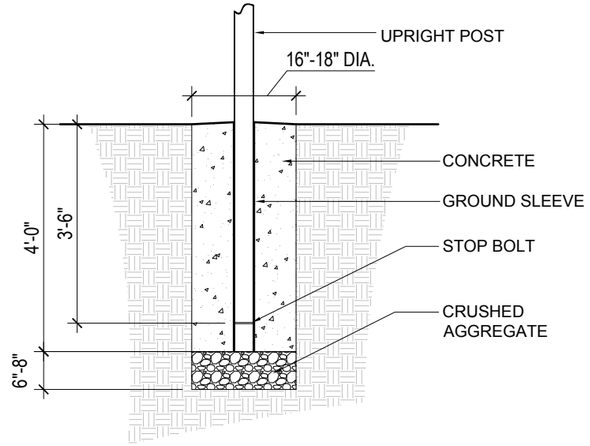

OPTIONAL GROUND SLEEVE INSTALLATION

3 OPTIONAL FOOTING DETAIL
Scale: 3/8"=1'-0"

DIRECT-BURY INSTALLATION:

1. Locate and excavate footings as noted in Details 1 and 2.
2. Fill bottom of each footing with a coarse, compacted crushed aggregate as shown in Detail 2.
3. Prior to setting the posts in concrete, drill a 3/8" diameter hole 2" down from the top of each of the posts, centered left-to-right. When setting each post in concrete, be sure to position the drilled hole in line with and facing the post at the opposite end. Loosely secure the top caps on to the posts (these will need to be removed again later when attaching the eyebolts).
4. Set one Upright Post directly onto aggregate in center of each footing and brace appropriately to hold in place. If the Upright Post has an internal burr on one end, place that end down into the footing. Height of Upright Post above grade should be 12'-6" as indicated on Details 4 and 5.
5. Fill footings with 3,500 p.s.i. concrete mix and slope top surface away from each Upright Post to prevent water from pooling. Allow concrete to cure according to packaging instructions.
6. Once the concrete has cured, drill a weep hole on each Upright Post as indicated on Detail 2.

GROUND SLEEVE INSTALLATION (OPTIONAL):

1. Locate and excavate footings as noted in Details 1 and 3.
2. Fill bottom of each footing with a coarse, compacted crushed aggregate as shown in Detail 3.
3. Set one Ground Sleeve directly onto aggregate in center of each footing (with the stop bolt at the bottom) and brace appropriately to hold in place.
4. Fill footings with 3,500 p.s.i. concrete mix and slope top surface away from each Ground Sleeve to prevent water from pooling. Allow concrete to cure according to packaging instructions.
5. Prior to setting the posts in the sleeves, drill a 3/8" diameter hole 2" down from the top of each of the posts, centered left-to-right.
6. Insert one Upright Post into each Ground Sleeve until it comes to rest on the stop bolt. When setting each post in the sleeves, be sure to position the drilled hole in line with and facing the post at the opposite end. Loosely secure the top caps on to the posts (these will need to be removed again later when attaching the eyebolts). The height of the Upright Post above grade should be 12'-6" as indicated on Details 4 and 5.

IMPORTANT: IF FREEZING TEMPERATURES OCCUR IN YOUR LOCATION, DO NOT BLOCK BOTTOM OPENING OF UPRIGHT POSTS OR GROUND SLEEVES WITH CONCRETE. DAMAGE MAY OCCUR.

BEACON ATHLETICS
phone: 1-800-747-5985
www.BeaconAthletics.com

© Copyright 2014 Beacon Athletics, Division of Rainbow Group, LLC.

DRAWING TITLE:
TUFFframe™ ELITE OUTDOOR 70' or 55' BATTING CAGE - SINGLE LAYOUT AND FOOTING DETAIL

CUSTOMER NAME:
PROJECT NAME:
PROJECT LOCATION:

REVISION #	DATE	BY
REV1	06/14/15	TMB

SCALE:	SEE DWG
DRAWN BY:	JP
DATE:	06/20/2014
PROJECT NO:	
DRAWING NO:	**SD-2**

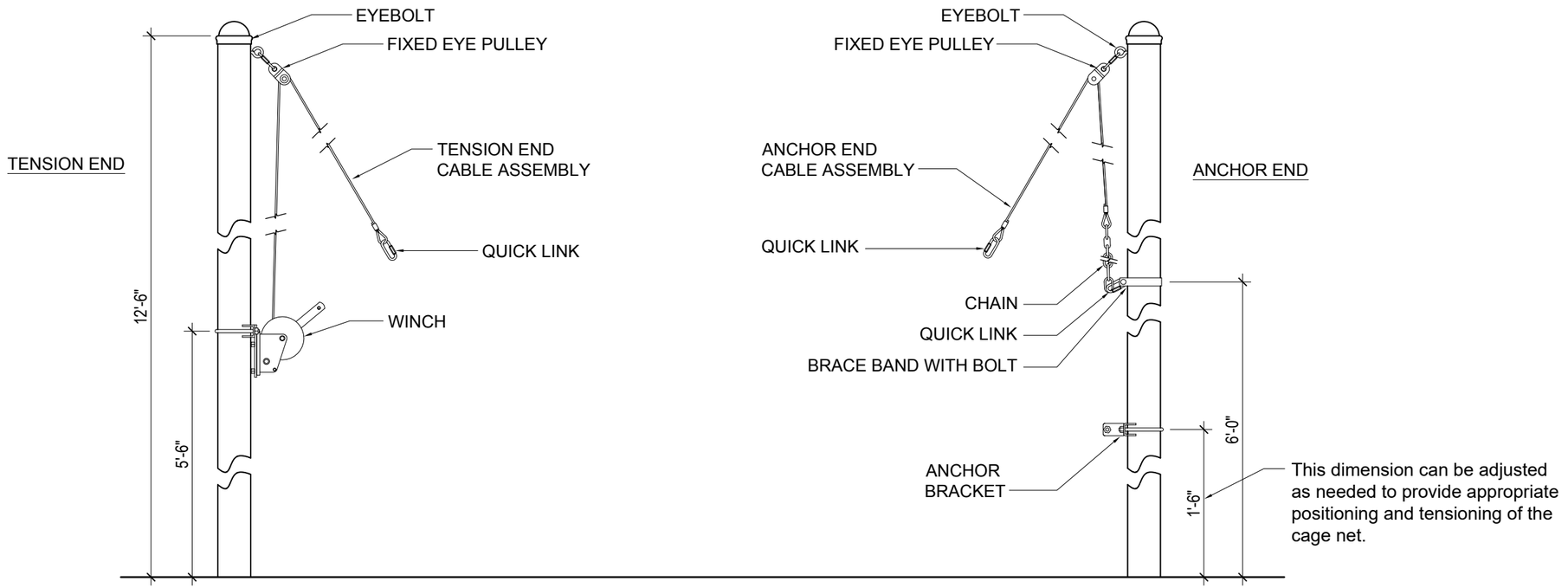

4 CABLE CONNECTION DETAIL

Scale: 3/4"=1'-0"

HARDWARE INSTALLATION:

1. Determine which end of the cage to attach the winches to - this will be referred to as the “Tension-End” (see Details 4 and 5). Position the U-bolt of one winch mount on one Tension-End post approximately 5'-6” above ground level and tighten the bolts to secure it in place. You may adjust vertical position as desired for comfort and ease of use. Be sure the winch is facing and in line with the post at the opposite end.
2. Release enough cable from the winch to allow the pre-installed fixed-eye pulley and eyebolt to reach the top of the post. Remove the top cap and insert the eyebolt into the drilled eyebolt hole. Once the eyebolt has been tightened and secured in place, re-attach the top cap firmly to the top of the post.
3. Release additional cable from the winch so that the finished cable end is easily accessible from ground level. The finished cable end can be attached to the cross-brace on the winch with the quick link provided until the net is attached to prevent it from drawing back up through the pulley. Repeat steps 1-3 for the other Tension-End posts.
4. At the opposite end of the cage, referred to as the “Anchor-End”, attach the anchor bracket to the Anchor-End post approximately 1'-6” off the ground (see Detail 4). Be sure the cross-bolt on the anchor bracket is facing and in line with the post at the opposite end. Tighten all bolts.
5. Secure the brace bands to the Anchor-End posts approximately 6' off the ground and connect the quick link on the end of the Anchor-End cable assembly chain to the brace band cross-bolt.
6. Attach the eyebolt on the Anchor-End cable assembly to the top of the post. Remove the top cap and insert the eyebolt into the drilled eyebolt hole. Once the eyebolt has been tightened and secured in place, re-attach the top cap firmly to the top of the post.
7. The other end of the cable (that will attach to the net) can be temporarily attached to the cross-bolt on the anchor bracket with the quick link provided to prevent it from drawing back up through the pulley. Repeat steps 4-7 for the other Anchor-End posts.

BEACON ATHLETICS
phone: 1-800-747-5985
www.BeaconAthletics.com

© Copyright 2014 Beacon Athletics, Division of Rainbow Group, LLC.

DRAWING TITLE: **TUFFframe™ ELITE OUTDOOR 70' or 55' BATTING CAGE - SINGLE DETAILS**

CUSTOMER NAME:
PROJECT NAME:
PROJECT LOCATION:

REVISION #	DATE	BY
REV1	06/14/15	TMB

SCALE:	SEE DWG
DRAWN BY:	JP
DATE:	06/20/2014
PROJECT NO:	
DRAWING NO:	**SD-3**

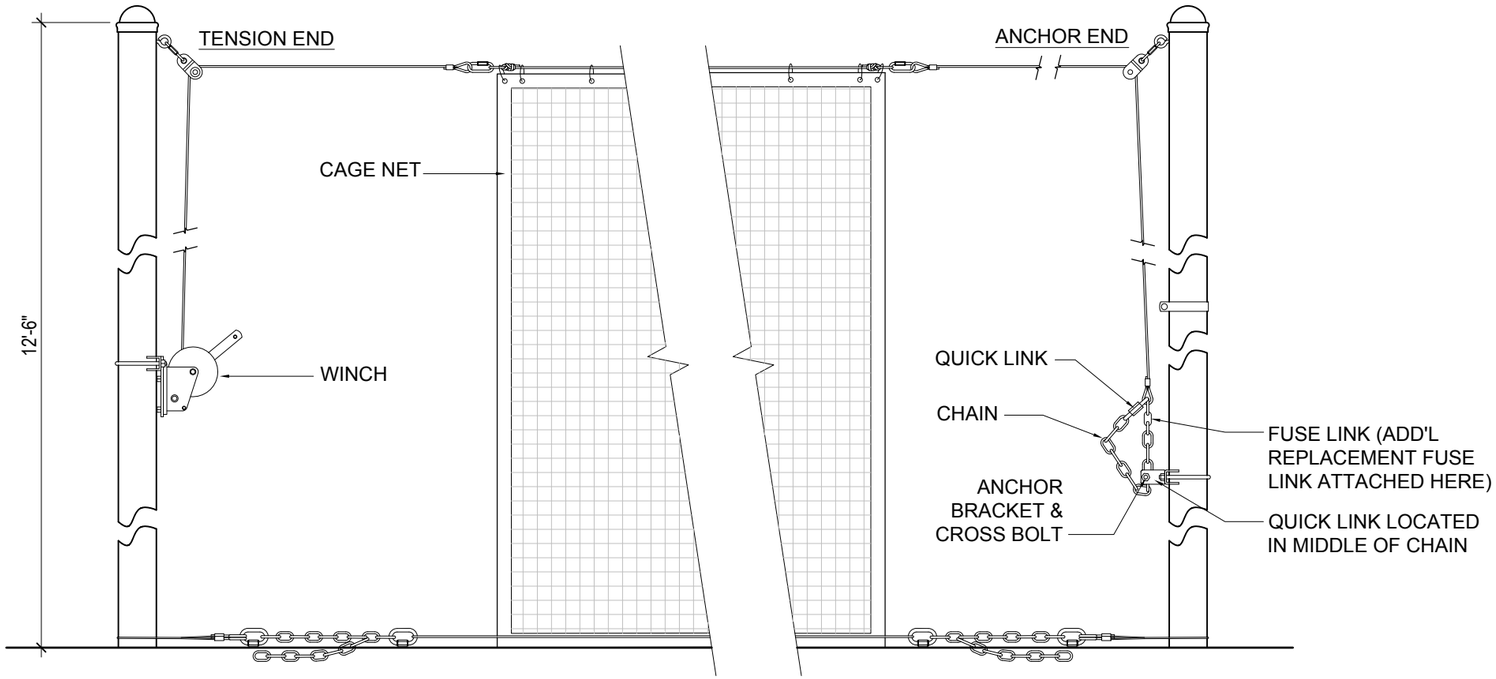

5 NET TENSIONING DETAIL
Scale: 3/4"=1'-0"

NET INSTALLATION:

1. Stretch the net out on the ground inside the cage to orient it correctly with the door flap placed in the desired location and the top cables lying on top stretched parallel to one another. The end rings should be available and lying adjacent to the Anchor-End and Tension-End posts.
   Please Note: Each cage net has one 4' wide entry flap door located on one end. Orient each cage net appropriately so that the door is accessible from the desired side.
2. Starting at a center post on the Anchor-End (this end of the cage can be hoisted into position by hand since there is not yet any tension on the system), disconnect the quick link on the end of the Anchor-End cable assembly from the anchor bracket and connect it to the steel ring at the end of the top center cable on the corresponding cage net.
3. Disconnect the quick link on the end of the chain from the brace band. Pull down on the chain and hoist the cage so that the steel end ring is positioned about 24" from the top eyebolt and pulley.
4. Re-connect the chain to the cross-bolt on the anchor bracket with the additional quick link located in the middle of the chain. Adjust the location of the connection to the chain as needed to attain the desired 24" spacing between the end of the cage and the post.
5. Connect the end of the Anchor-End chain section to the cable loop immediately above the fuse link on each of the Anchor-End posts (see Detail 5). The fuse links provide overload protection for the posts. If cable tension is increased excessively by over-cranking on the winches or weather conditions, these links will separate to relieve tension and protect the posts. By connecting the end of the chain to the cable loop immediately above the fuse link on each post, you will prevent the cable ends from drawing all the way back up to the pulleys after the link breaks, thereby making the re-connection much easier and quicker (no ladder required). The quick links on either side of the fuse link can be opened and a replacement link can be installed. A replacement fuse link is already attached to each of these quick links for your convenience
6. Repeat steps 1-5 for the other Anchor-End corner posts by attaching to the corresponding top cables on the cage net. Be sure to maintain a minimum 24" spacing between the cage net and posts to protect against ricochets. For multi-cage units (double-wide, triple-wide, etc.), repeat this process for each individual cage. Please note that adjacent cage nets on multi-cage units will share a connection to the corner post cable assembly at both ends.
7. Move to a center post on the Tension-End. Connect the quick link on the end of the Tension-End cable assembly to the steel ring at the end of the top center cable on the corresponding cage net. Connect the remaining two Tension-End cable assemblies on the corner posts to the corresponding top cables on the cage net. For multi-cage units (double-wide, triple-wide, etc.), repeat this process for each individual cage. Please note that adjacent cage nets on multi-cage units will share a connection to the corner post cable assembly at both ends.
8. Begin winding up the winches on each post until the top cables at the center of the cage rise to a height of not more than about 11 feet off the ground. Tensioning to this height should provide a good balance between interior space and system tension. When tensioning is complete, the winch handles can be removed if desired to discourage tampering.

******* DO NOT OVER-TENSION THE CABLES *******

NET REMOVAL:

1. Carefully release tension on the winches one by one. You may need to tighten each one an additional quarter-turn to relieve the load on the ratchet mechanism enough to release it completely. Once free, slowly release tension by unwinding the cable until the end of the net is allowed to rest on the ground. Be sure to maintain a firm grip on the handle at all times so as not to cause injury to yourself or others.
2. Repeat this step for the other Tension-End posts. Once the cage net(s) is/are lowered, disconnect the Tension-End cable assemblies from the top cables on the net(s).
3. Attach and secure the quick links on the ends of each Tension-End cable assembly to the cross-brace on the winches. Wind up any excess cable securely, but do not apply excessive tension.
4. At the Anchor-End, disconnect both the quick link on the end of the chain from the cable loop immediately above the fuse link as well as the intermediate quick link from the cross-bolt on the anchor bracket.
5. Re-connect the quick link on the end of the chain to the brace band, thus lowering the end of the cage to the ground.
6. Repeat this step for the other Anchor-End posts. Once the cage net(s) is/are lowered completely, disconnect the Anchor-End cable assemblies from the top cables on the net.
7. Attach and secure the quick links on the ends of each Anchor-End cable assembly to the cross-bolt on the anchor brackets. Adjust the position of the connection between the chain and brace band as needed to secure any slack in the cable assembly.

NET STORAGE:

1. When packaging the cage net(s) for storage, the goal is to avoid tangling the net and cables. Begin by bringing the three support cables running along the top of the cage together. The easiest way to do this is to have one person at each end of the lowered cage. Each person collects the three cable end rings and pulls tension between each other so that the cables run adjacent and parallel to one another.
2. Lay the cables down on the top of the lowered cage and push the sides of the cage toward the cables until you have a full length pile of net about 2' wide with the cables on top.
3. Move your storage container to the middle of the net (a clean 55-gallon garbage can works well for this). Grab the net at the middle and push it down to the bottom of the container. Keep loading the net in from both sides equally until the entire cage is in the container and the three cable rings from each end of the cage are left hanging out opposite sides of the container's top opening.
4. To deploy the cage the next time, set the container in the middle of the designated cage area and have two people each take one set of cable rings and pull the net out of the container as they walk toward the support posts at opposite ends of the cage.

BEACON ATHLETICS
phone: 1-800-747-5985
www.BeaconAthletics.com

© Copyright 2014 Beacon Athletics, Division of Rainbow Group, LLC.

DRAWING TITLE: **TUFFframe™ ELITE OUTDOOR 70' or 55' BATTING CAGE - SINGLE DETAILS**
CUSTOMER NAME: -
PROJECT NAME: -
PROJECT LOCATION: -

REVISION #	DATE	BY
REV1	06/14/15	TMB

SCALE:	SEE DWG
DRAWN BY:	JP
DATE:	06/20/2014
PROJECT NO:	
DRAWING NO:	**SD-4**

NET REMOVAL:

1. Carefully release tension on the winches one by one. You may need to tighten each one an additional quarter-turn to relieve the load on the ratchet mechanism enough to release it completely. Once free, slowly release tension by unwinding the cable until the end of the net is allowed to rest on the ground. Be sure to maintain a firm grip on the handle at all times so as not to cause injury to yourself or others.
2. Repeat this step for the other Tension-End posts. Once the cage net(s) is/are lowered, disconnect the Tension-End cable assemblies from the top cables on the net(s).
3. Attach and secure the quick links on the ends of each Tension-End cable assembly to the cross-brace on the winches. Wind up any excess cable securely, but do not apply excessive tension.
4. At the Anchor-End, disconnect both the quick link on the end of the chain from the cable loop immediately above the fuse link as well as the intermediate quick link from the cross-bolt on the anchor bracket.
5. Re-connect the quick link on the end of the chain to the brace band, thus lowering the end of the cage to the ground.
6. Repeat this step for the other Anchor-End posts. Once the cage net(s) is/are lowered completely, disconnect the Anchor-End cable assemblies from the top cables on the net.
7. Attach and secure the quick links on the ends of each Anchor-End cable assembly to the cross-bolt on the anchor brackets. Adjust the position of the connection between the chain and brace band as needed to secure any slack in the cable assembly.

NET STORAGE:

1. When packaging the cage net(s) for storage, the goal is to avoid tangling the net and cables. Begin by bringing the three support cables running along the top of the cage together. The easiest way to do this is to have one person at each end of the lowered cage. Each person collects the three cable end rings and pulls tension between each other so that the cables run adjacent and parallel to one another.
2. Lay the cables down on the top of the lowered cage and push the sides of the cage toward the cables until you have a full length pile of net about 2' wide with the cables on top.
3. Move your storage container to the middle of the net (a clean 55-gallon garbage can works well for this). Grab the net at the middle and push it down to the bottom of the container. Keep loading the net in from both sides equally until the entire cage is in the container and the three cable rings from each end of the cage are left hanging out opposite sides of the container's top opening.
4. To deploy the cage the next time, set the container in the middle of the designated cage area and have two people each take one set of cable rings and pull the net out of the container as they walk toward the support posts at opposite ends of the cage.

BEACON ATHLETICS
phone: 1-800-747-5985
www.BeaconAthletics.com

© Copyright 2014 Beacon Athletics, Division of Rainbow Group, LLC.

DRAWING TITLE: **TUFFframe™ ELITE OUTDOOR 70' or 55' BATTING CAGE - SINGLE DETAILS**

CUSTOMER NAME:
PROJECT NAME:
PROJECT LOCATION:

REVISION #	DATE	BY
REV1	06/14/15	TMB

SCALE:	SEE DWG
DRAWN BY:	JP
DATE:	06/20/2014
PROJECT NO:	
DRAWING NO:	***SD-5***

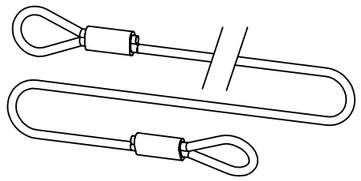

LENGTH CABLE 55'0" OR 70'0"
(BOTH ENDS FINISHED)

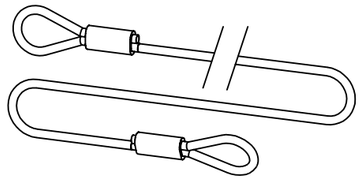

WIDTH CABLE 13'9"
(BOTH ENDS FINISHED)

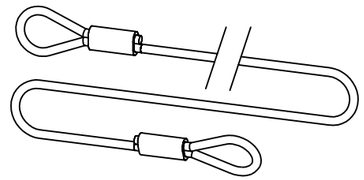

SHORT CABLE 3'0"
(BOTH ENDS FINISHED)

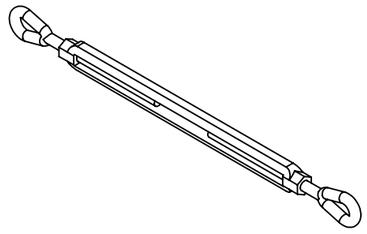

1/2" EYE-EYE TURNBUCKLE

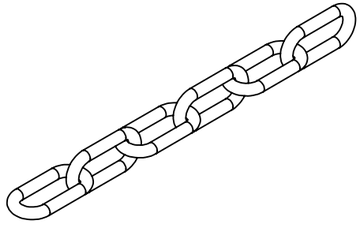

24" ADJUSTMENT CHAIN

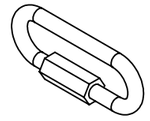

1/4" WIDE JAW QUICK LINK

QTY	DESCRIPTION
2	LENGTH GROUND CABLE (55'0" FOR 55' CAGE, 70'0" FOR 70' CAGE)
2	WIDTH GROUND CABLE 13'9"
2	1/2" EYE-EYE TURNBUCKLE
4	SHORT CABLE
2	24" ADJUSTMENT CHAIN
8	1/4" WIDE JAW ZINC PLATED QUICK LINKS
2	8" LONG 120# CABLE TIE PACKS

BEACON ATHLETICS
PHONE: 1-800-747-5985
www.BeaconAthletics.com

DRAWING TITLE:
BATTING CAGE GROUND CABLE KIT
PARTS LIST
CUSTOMER NAME:
PROJECT NAME:
PROJECT LOCATION:

REVISION #	BY	DATE
01	JD	04/04/2025

DRAWN BY: JD
DATE: 04/04/2025
SHEET NO:
GC-1

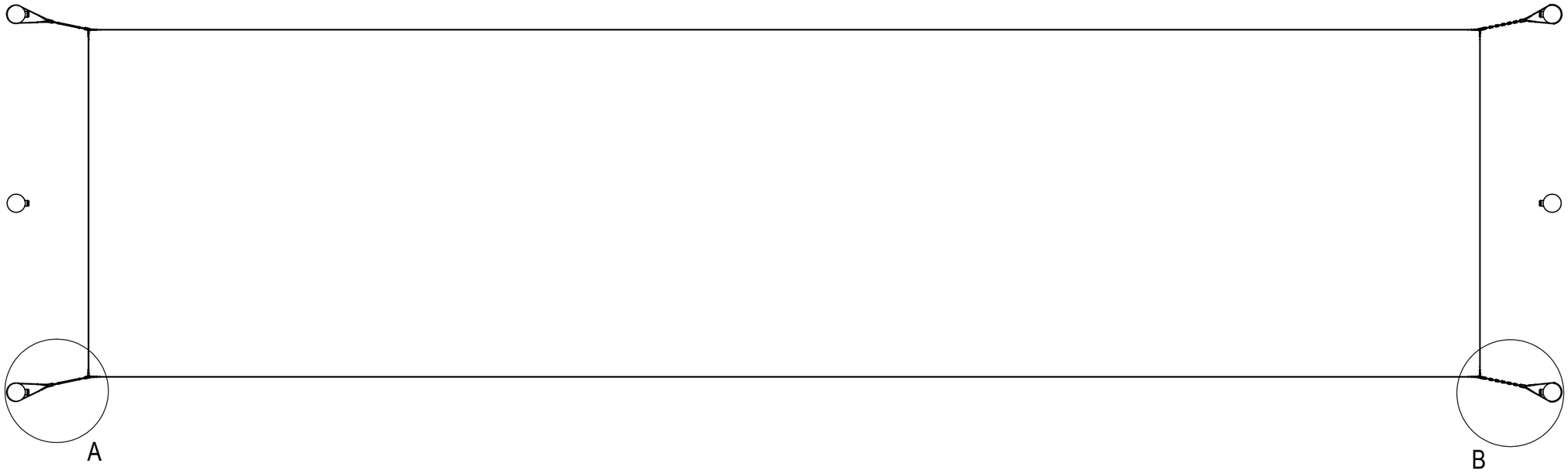

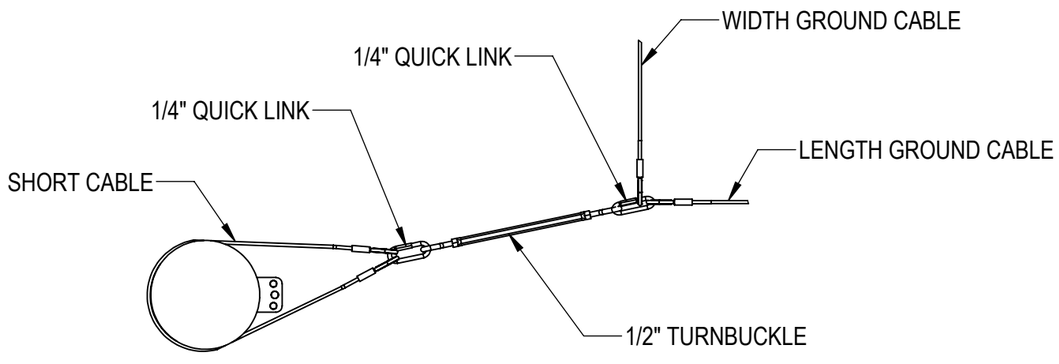

DETAIL A

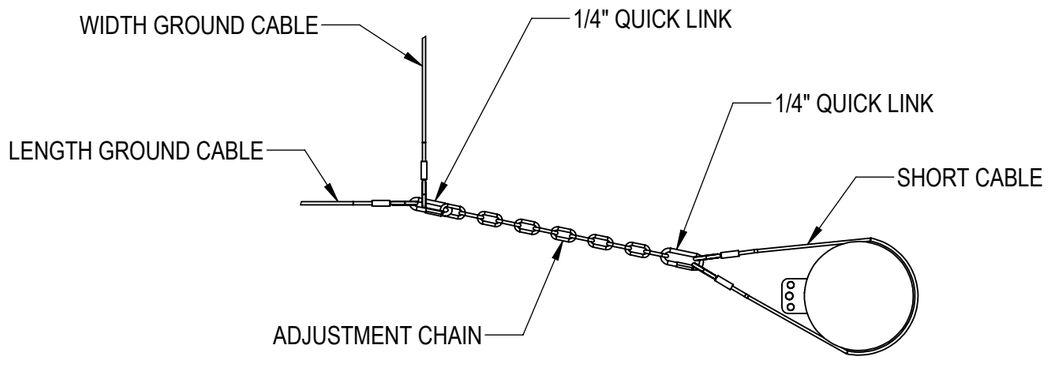

DETAIL B

BEACON ATHLETICS
PHONE: 1-800-747-5985
www.BeaconAthletics.com

DRAWING TITLE:
BATTING CAGE GROUND CABLE KIT LAYOUT
CUSTOMER NAME:
PROJECT NAME:
PROJECT LOCATION:

REVISION #	BY	DATE
01	JD	04/04/2025

DRAWN BY: JD
DATE: 04/04/2025
SHEET NO:
GC-2